PLASTER SEPARATOR

Model 8037905 | Stainless steel plaster trap for sinks and workbenches



Plaster Separators are designed to stop the deposition of substances such as plaster and sand, which are often flushed through the outlet and block the sewer pipe. They are usually placed in connection with stainless steel workbenches and laundry chutes. Solid particles are separated from the water and held back in the bottom of the container.

Because of these qualities, Plaster Separators are very popular in art facilities, universities, colleges and art schools. They are also ideal for dentists and hospitals.

PRODUCT DATA

Material	Stainless steel
Volume	13 litres
Outlet	1½"
Attachment	1½" connection to the sink, with brackets to the wall
Other	Removable container at the base of the unit, easily detached for emptying and cleaning. The clamp that locks the container also serves as a handle.

DIMENSIONS (mm)

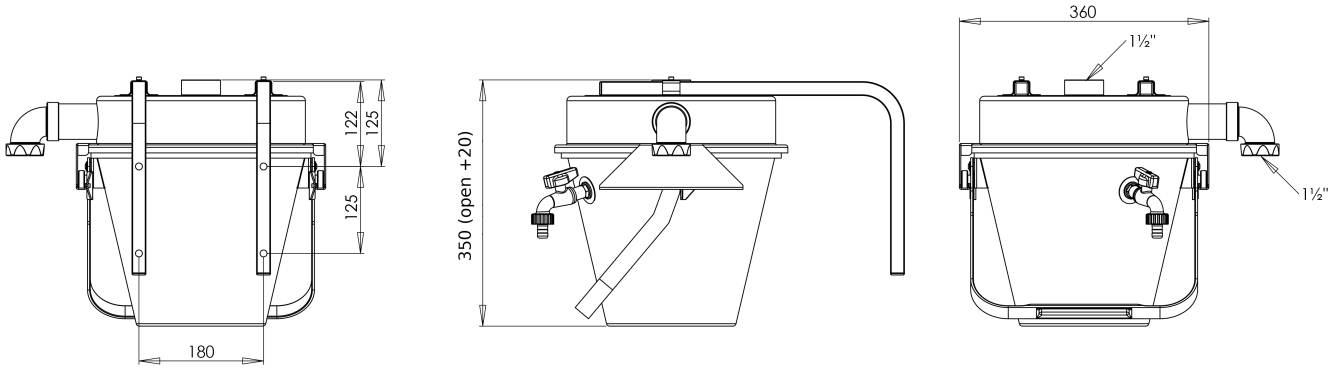

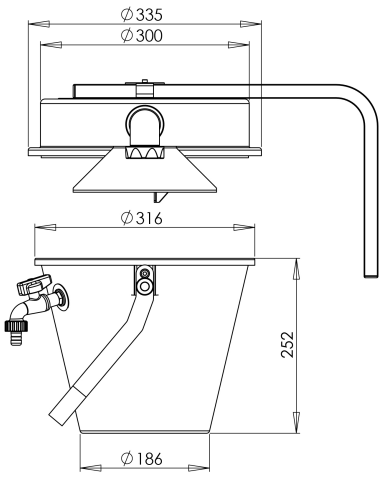

KEY DIMENSIONS

Overall width	**360**
Overall height	**350 (open +20)**
Container, top	**Ø316**
Container, base	**Ø186**
Container height	**252**
Connections	**1½"**